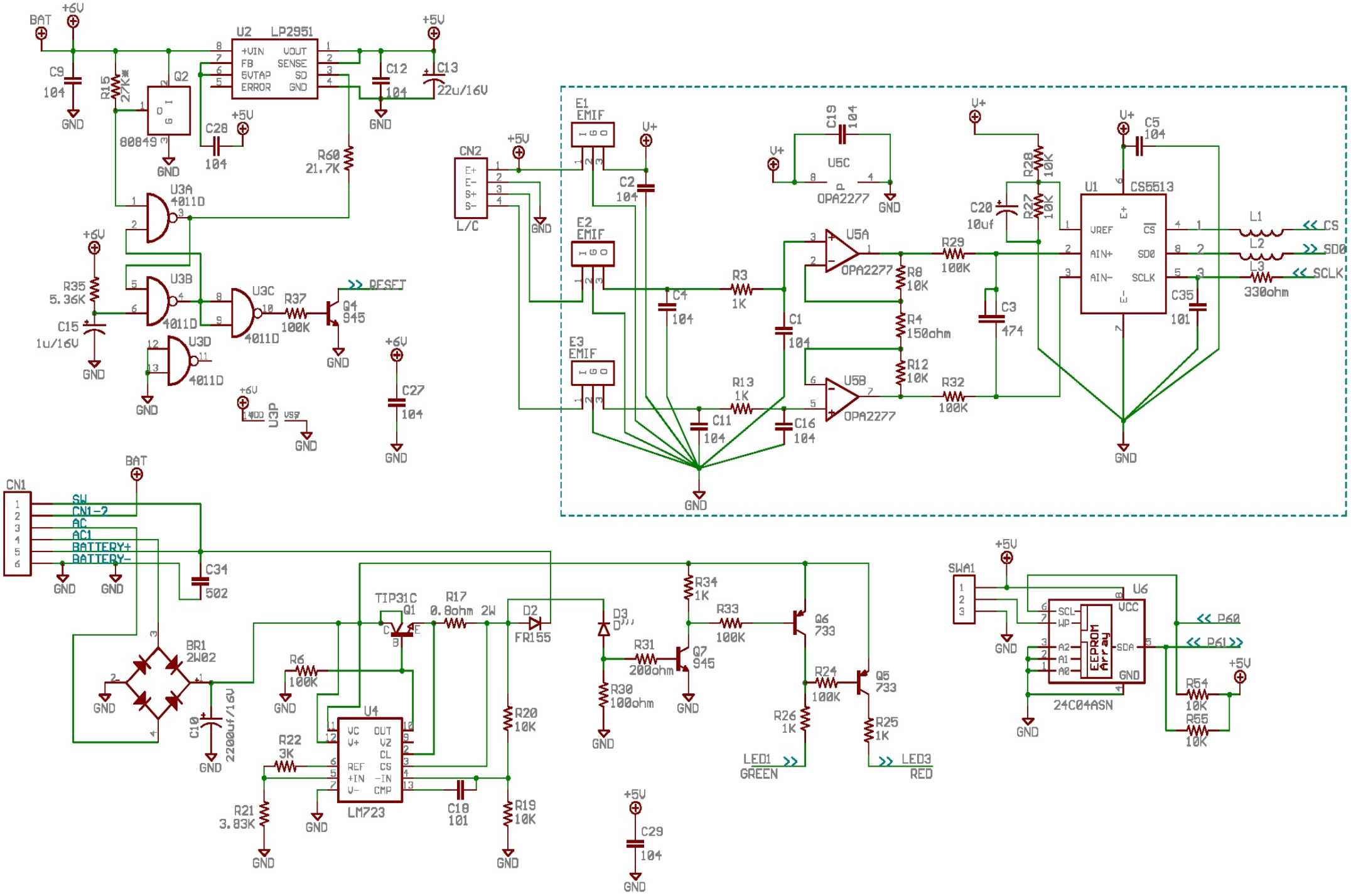
BAT
+6V
C9
104
GND
R15
27K*
Q2
80849
U2
LP2951
+VIN
FB
5VTAP
ERROR
VOUT
SENSE
SD
GND
+5V
C12
104
C13
22u/16V
C28
104
R60
21.7K
U3A
4011D
U3B
4011D
U3C
4011D
U3D
4011D
U3P
R35
5.36K
C15
1u/16V
R37
100K
Q4
945
>> RESET
C27
104
CN2
L/C
E1
EMIF
E2
EMIF
E3
EMIF
C2
104
C4
104
R3
1K
C1
104
R13
1K
C11
104
C16
104
C19
104
U5C
OPA2277
U5A
OPA2277
U5B
OPA2277
R8
10K
R4
150ohm
R12
10K
R29
100K
R32
100K
C3
474
R28
10K
R27
10K
C20
10uf
C5
104
U1
CS5513
VREF
AIN+
AIN-
E+
E-
CS
SDO
SCLK
C35
101
L1
L2
L3
330ohm
<< CS
>> SDO
<< SCLK
CN1
SW
CN1-2
AC
AC1
BATTERY+
BATTERY-
C34
502
BR1
2W02
C10
2200uf/16V
TIP31C
Q1
R17
0.8ohm 2W
D2
FR155
D3
R6
100K
U4
LM723
VC
V+
REF
+IN
V-
OUT
VZ
CL
CS
-IN
CMP
R22
3K
R21
3.83K
C18
101
R20
10K
R19
10K
R34
1K
R33
100K
R31
200ohm
Q7
945
R30
100ohm
Q6
733
R24
100K
Q5
733
R26
1K
R25
1K
LED1
GREEN
LED3
RED
C29
104
SWA1
U6
SCL
WP
A2
A1
A0
VCC
SDA
GND
EEPROM Array
24C04ASN
<< P60
<< P61>>
R54
10K
R55
10K